1900
Floor level 4
Compartment Kinderbox

Assembly Instructions.
Please read these instructions carefully before assembling the unit and where necessary refer to the enclosed Component List.

Additional Tools Required.

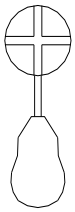

Adults Required For Assembly.

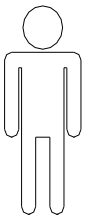

Maintenance.

Some residual dust from the manufacturing process may be apparent.
Your unit may be cleaned with a damp cloth.
Stubborn marks may be removed with a mild detergent or non-abrasive cream cleaner.
Examine all fasteners periodically and retighten where necessary.
Care must be taken not to over tighten the fasteners.

This unit is designed for use indoors on a flat level surface.

An Adult Should **ALWAYS SUPERVISE PLAY!**

Please retain our address for future reference

Manufactured by:
Mike Miller Associates Ltd.,
Syke Road, Wigton. Cumbria CA7 9NS
Tel: 016973 49774/45300 Fax: 016973 45511
Email: info@twoey.co.uk
Website: www.twoeytoys.com
Registered in England No: 1425839
Registered Office: The Old Brewery, Caldbeck.
Cumbria CA7 8EW

1900
Floor level 4
Compartment Kinderbox

Mode D'emploi Pour Assemblage.
Lisez attentivement ce mode d'emploi avant de commencer l'assemblage de cet article et reportez-vous a la liste des composants ci-jointe.

Outils Supplémentaires Nécessaires

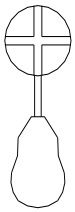

Assemblage Reserve Pour Adultes

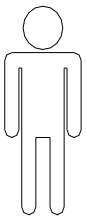

Entretien.
Ill est possible qu'il reste in peu de poussière crée pendant la fabrication de l'article.
Un détergent léger ou une crème non abrasive peuvent être utilises pour nettoyer les taches persistantes. Vérifiez régulièrement les

Utilisez cet article seulement a l'interieur sur une surface plat

Un adulte doit toujours surveiller jouer

Conservez nos coordonnees pour obtenir tous renseignements complementaires a l'avenir.

Manufactured by:
Mike Miller Associates Ltd.,
Syke Road, Wigton. Cumbria CA7 9NS
Tel: 016973 49774/45300 Fax: 016973 45511
Email: info@twoey.co.uk
Website: www.twoeytoys.com
Registered in England No: 1425839
Registered Office: The Old Brewery, Caldbeck.
Cumbria CA7 8EW

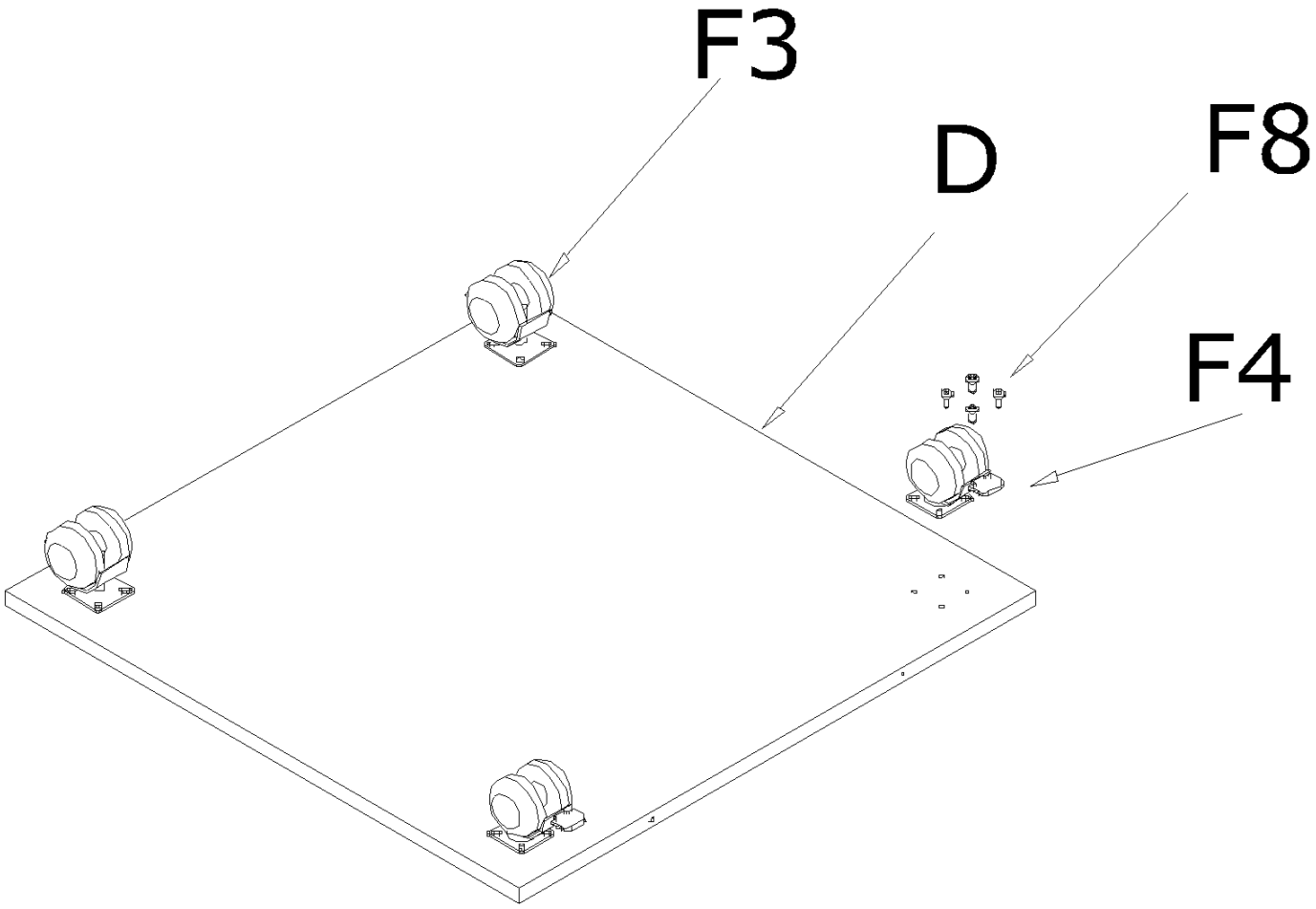
F3
D
F8
F4

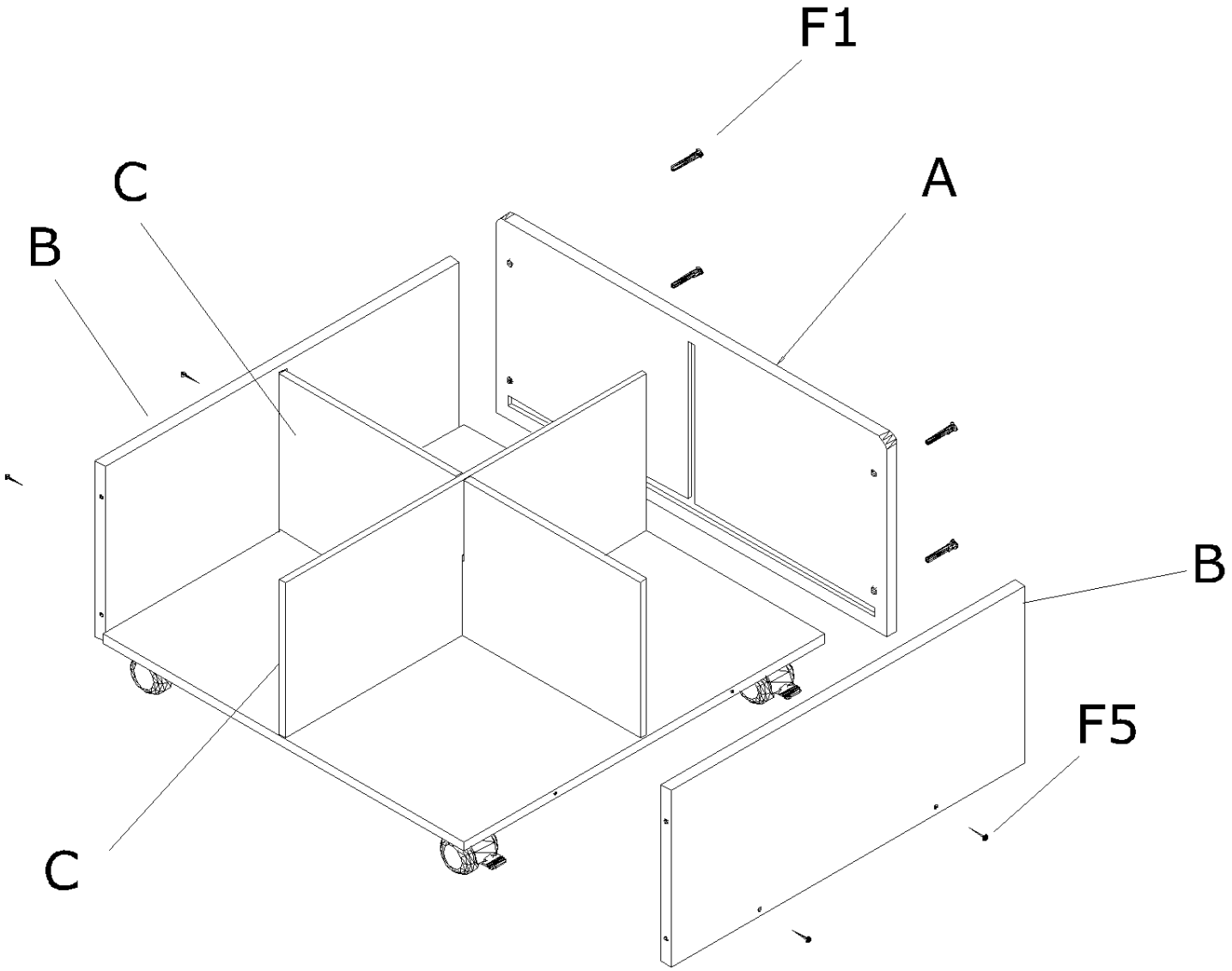
F1
C
A
B
B
F5
C

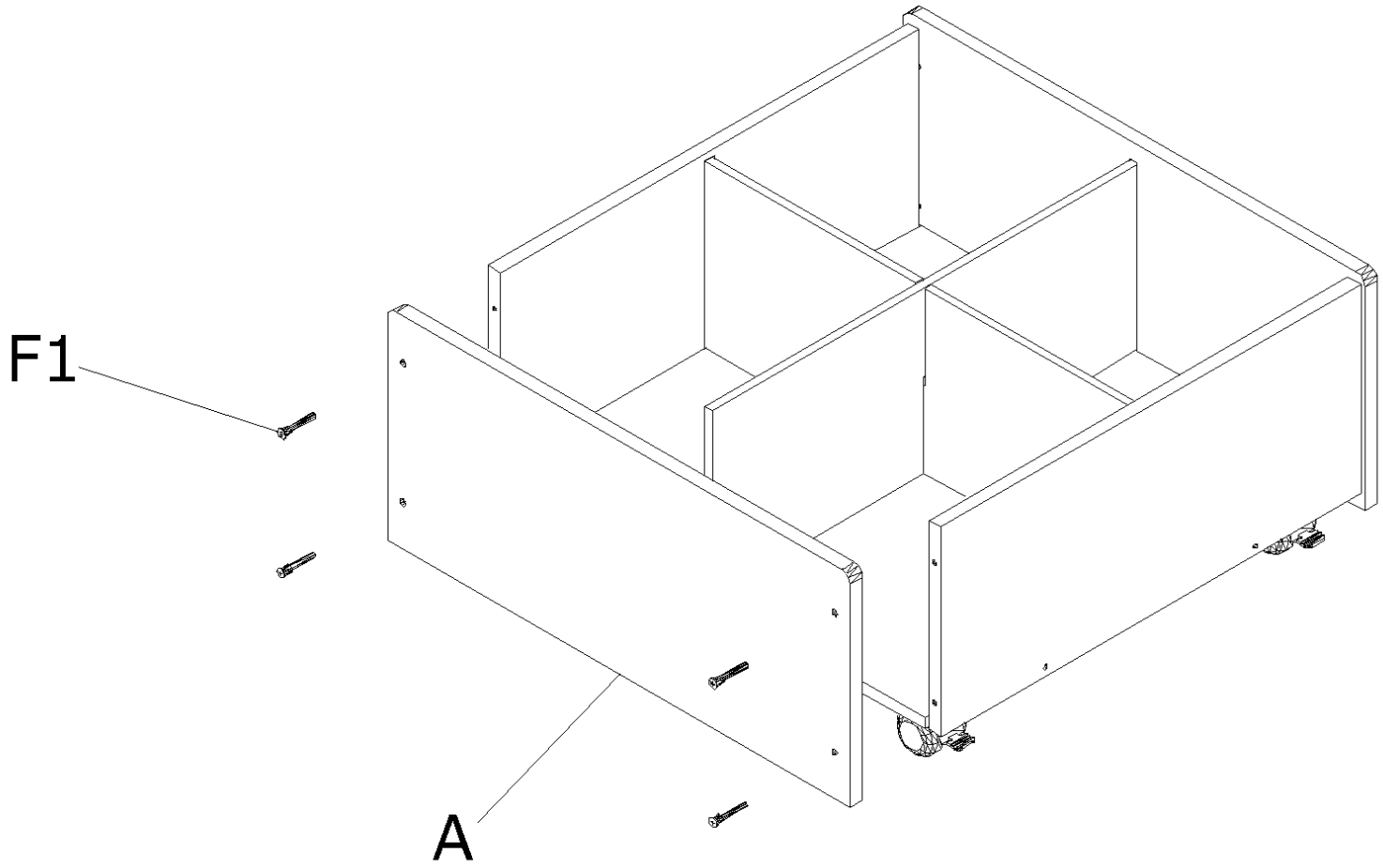
F1
A

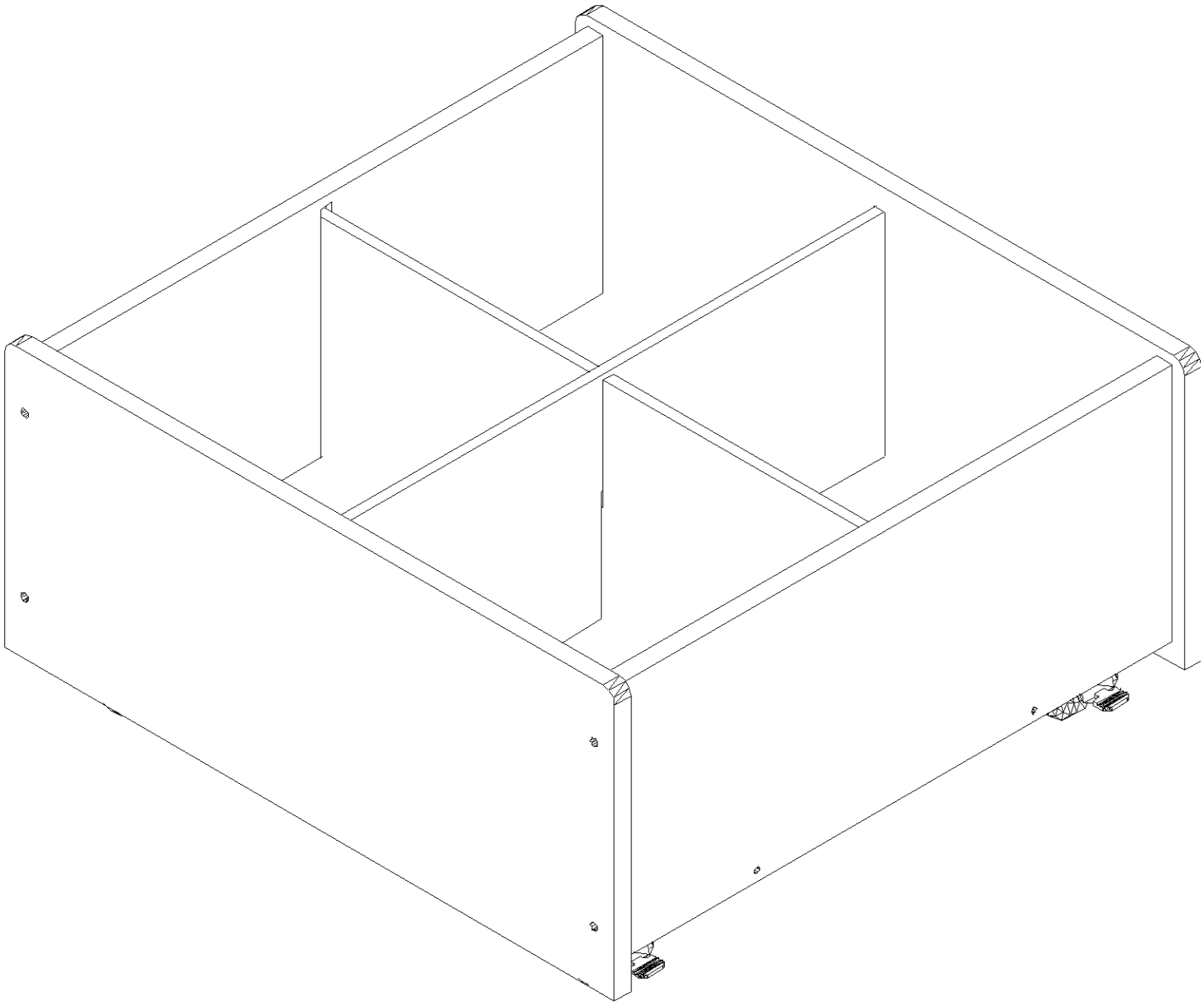

1900 - Floor Level 4 Compartment Kinderbox (CS0729) 30/10/2019

1900 - FLOOR LEVEL 4 COMPARTMENT KINDERBOX (CS0729)
COMPONENTS LIST

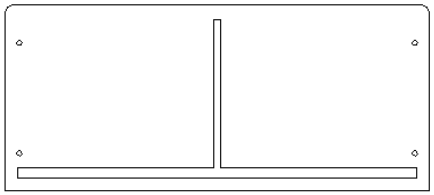

A
PN: 1900301
QTY 2

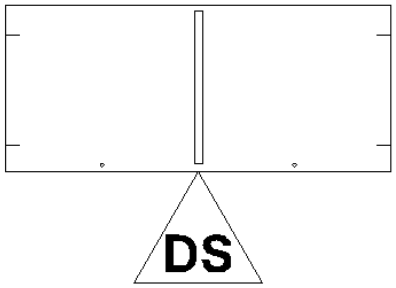

B
PN: 1900102
QTY 2

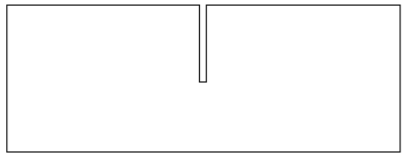

C
PN: 1900401
QTY 2

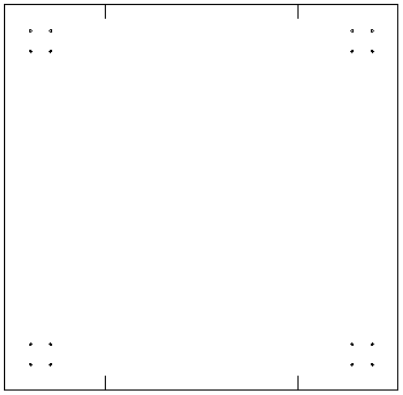

D
PN: 1900202
QTY 1

ASSEMBLY
INSTRUCTION

KIT (SOME EXTRA'S INCLUDED)

F1
SUPERJOINER
PN: FS6338SW4
QTY 8

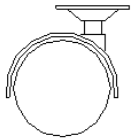

F3
CASTOR
C/W PLATE
PN: ACGR50P
QTY 2

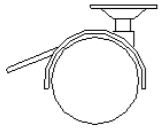

F4
CASTOR LOCKING
C/W PLATE
PN: ACGR50PB
QTY 2

ALLEN KEY
PN: AMSW4
QTY 1

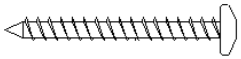

F5
SCREW PAN HD
No.6 x 1 1/4"
PN: FS611/4P
QTY 4

F8
SCREW PAN.HD.
PN: FS101/2P
QTY 18

30/10/2019

1900 - Floor Level 4 Compartment Kinderbox (CS0729)